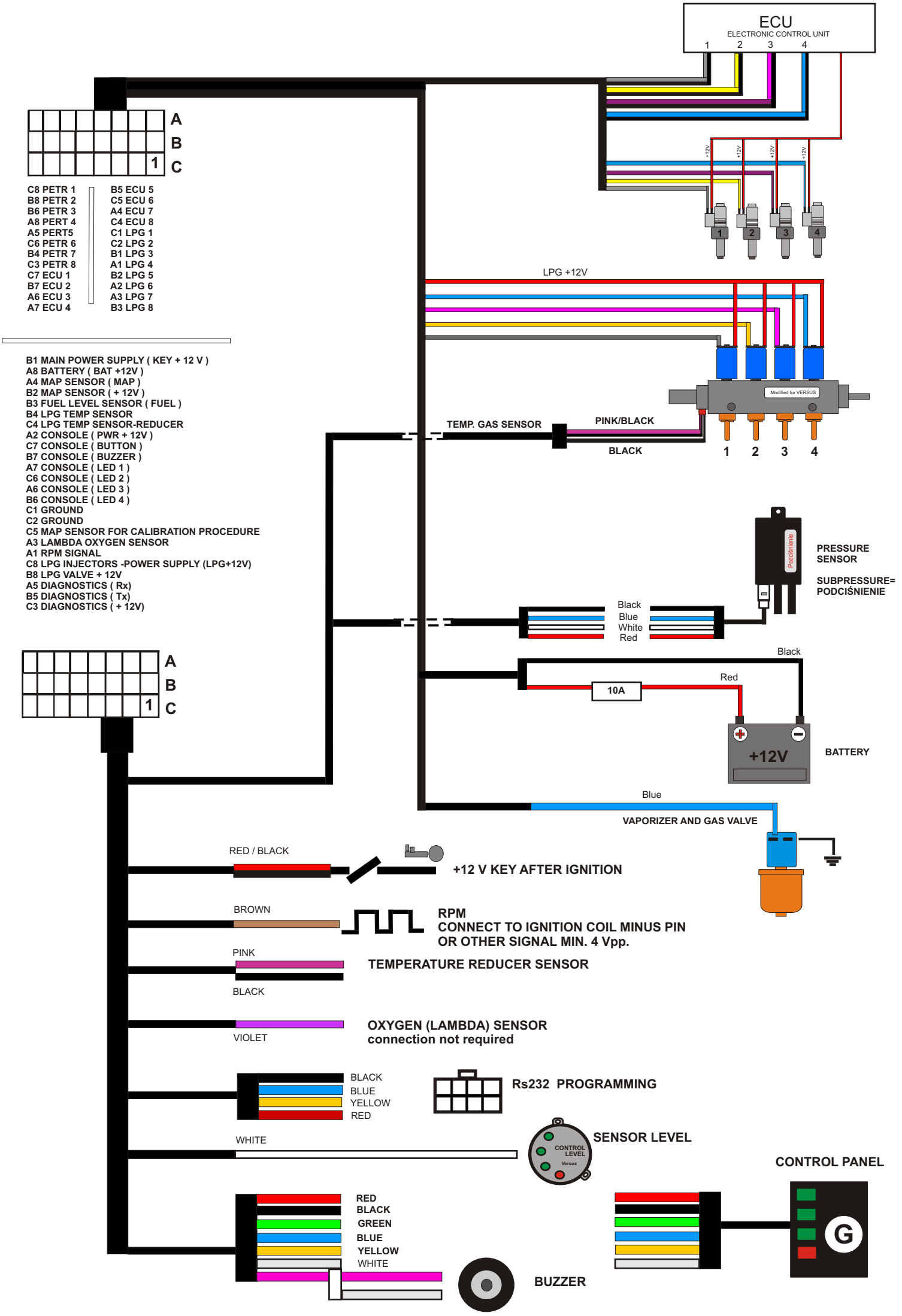
ECU
ELECTRONIC CONTROL UNIT
1 2 3 4
A
B
1 C
C8 PETR 1
B8 PETR 2
B6 PETR 3
A8 PERT 4
A5 PERT5
C6 PETR 6
B4 PETR 7
C3 PETR 8
C7 ECU 1
B7 ECU 2
A6 ECU 3
A7 ECU 4
B5 ECU 5
C5 ECU 6
A4 ECU 7
C4 ECU 8
C1 LPG 1
C2 LPG 2
B1 LPG 3
A1 LPG 4
B2 LPG 5
A2 LPG 6
A3 LPG 7
B3 LPG 8
+12V
LPG +12V
Modified for VERSUS
TEMP. GAS SENSOR
PINK/BLACK
BLACK
1 2 3 4
B1 MAIN POWER SUPPLY (KEY + 12 V)
A8 BATTERY (BAT +12V)
A4 MAP SENSOR (MAP)
B2 MAP SENSOR (+ 12V)
B3 FUEL LEVEL SENSOR (FUEL)
B4 LPG TEMP SENSOR
C4 LPG TEMP SENSOR-REDUCER
A2 CONSOLE (PWR + 12V)
C7 CONSOLE (BUTTON)
B7 CONSOLE (BUZZER)
A7 CONSOLE (LED 1)
C6 CONSOLE (LED 2)
A6 CONSOLE (LED 3)
B6 CONSOLE (LED 4)
C1 GROUND
C2 GROUND
C5 MAP SENSOR FOR CALIBRATION PROCEDURE
A3 LAMBDA OXYGEN SENSOR
A1 RPM SIGNAL
C8 LPG INJECTORS -POWER SUPPLY (LPG+12V)
B8 LPG VALVE + 12V
A5 DIAGNOSTICS (Rx)
B5 DIAGNOSTICS (Tx)
C3 DIAGNOSTICS (+ 12V)
Podciśnienie
PRESSURE SENSOR
SUBPRESSURE= PODCIŚNIENIE
Black
Blue
White
Red
Black
Red
10A
+12V
BATTERY
Blue
VAPORIZER AND GAS VALVE
A
B
1 C
RED / BLACK
+12 V KEY AFTER IGNITION
BROWN
RPM
CONNECT TO IGNITION COIL MINUS PIN
OR OTHER SIGNAL MIN. 4 Vpp.
PINK
BLACK
TEMPERATURE REDUCER SENSOR
VIOLET
OXYGEN (LAMBDA) SENSOR
connection not required
BLACK
BLUE
YELLOW
RED
Rs232 PROGRAMMING
WHITE
CONTROL LEVEL
Versus
SENSOR LEVEL
CONTROL PANEL
RED
BLACK
GREEN
BLUE
YELLOW
WHITE
G
BUZZER